IMS33 Series

Engineering Data

Model	Stroke (mm)	Max.Energy / Cycle(Nm) E_T	Max.Energy / Hour(Nm/h) E_TC	Effective Weight(kg) m_e	Recoil Forec(N)		Weight(kg)
					Ext.	Comp.	
IMS33-25-1	25	300	120,000	7-32	45	90	0.53
IMS33-25-2	25	300	120,000	28-130	45	90	0.53
IMS33-25-3	25	300	120,000	80-590	45	90	0.53
IMS33-25-4	25	300	120,000	440-2,050	45	90	0.53
IMS33-25-5	25	300	120,000	2,000-12,500	45	90	0.53
IMS33-50-1	50	500	150,000	13-60	45	135	0.64
IMS33-50-2	50	500	150,000	56-240	45	135	0.64
IMS33-50-3	50	500	150,000	160-1,200	45	135	0.64
IMS33-50-4	50	500	150,000	1,000-4,200	45	135	0.64
IMS33-50-5	50	500	150,000	4,000-25,000	45	135	0.64

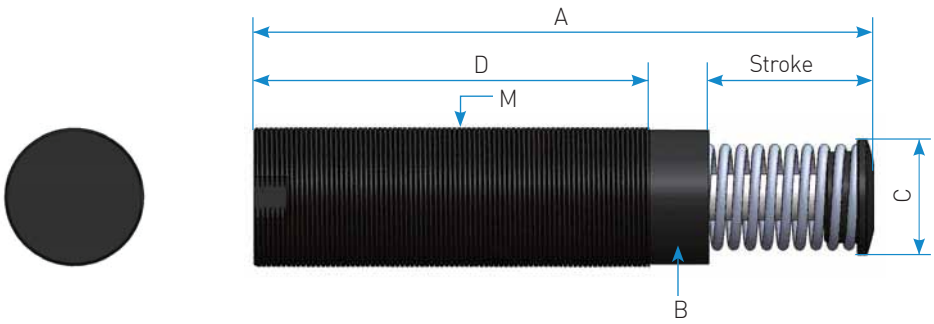

Dimensions

Model	Stroke	A	B	C	D	M
IMS33-25	25	138	Ø31	Ø25	95	M33*1.5P
IMS33-50	50	189	Ø31	Ø25	121	M33*1.5P

Accessories

• Other accessories to be ordered separately

(unit : mm)

Lock Collar

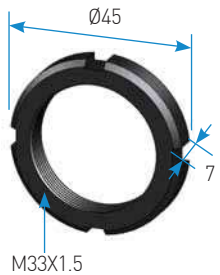

LC 33

Square Flange

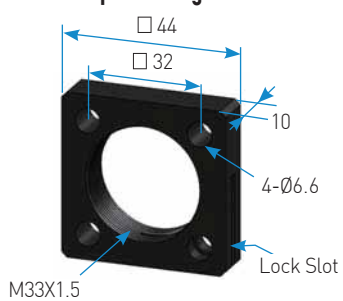

SF 33

Clamp Mount

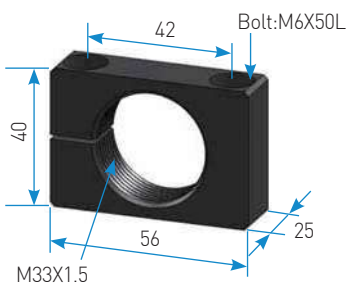

CM 33